E32 Motor Assembly

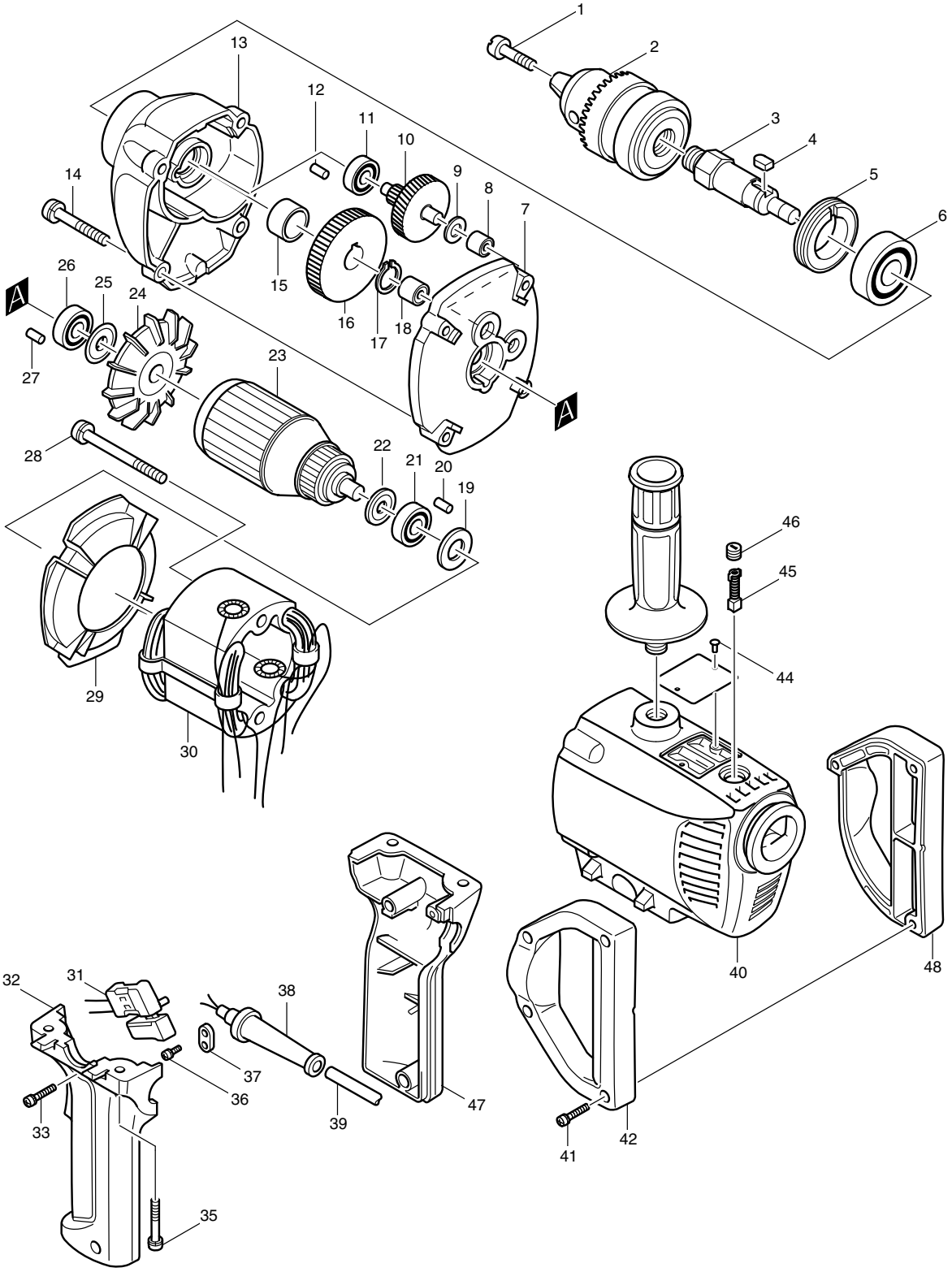

E32 Motor Parts List

Item No.	Part No.	Qty. Used	Description
1	***	1	- FLAT HEAD SCREW M6X22
3	325494-1	1	SPINDLE
4	254211-1	1	KEY 5
5	285808-5	1	BEARING RETAINER 25-36
6	211206-7	1	BALL BEARING 6202LLB
7	312989-3	1	GEAR HOUSING COVER
			INC. 27
8	212012-3	1	NEEDLE BEARING 609
9	261008-1	1	FIBER WASHER 6
10	226028-2	1	GEAR COMPLETE 7-41
11	211016-2	1	BALL BEARING 626LLB
12	263002-9	1	RUBBER PIN 4
13	312988-5	1	GEAR HOUSING
			INC. 12
14	****	4	TAPPING SCREW BT M5X35
15	257018-4	1	RING 15
16	221261-1	1	SPUR GEAR 47
17	961054-1	1	RETAINING RING S-14
18	212003-4	1	NEEDLE BEARING 810
19	253192-6	1	FLAT WASHER 14
20	263002-9	1	RUBBER PIN 4
21	211033-2	1	BALL BEARING 608LB
22	681613-2	1	INSULATION WASHER
23	**	1	ARMATURE ASS'Y 115V
			INC. 21,22,24-26
24	241622-9	1	FAN 62
25	213002-9	1	DUST SEAL 8
26	211031-6	1	BALL BEARING 608LLB
27	263002-9	1	RUBBER PIN 4
28	****	2	TAPPING SCREW BT M5X60
29	411487-5	1	BAFFLE PLATE
30	**	1	FIELD ASS'Y 115V
31	651564-3	1	SWITCH SL220SD-4
32	*	1	SWITCH HANDLE COVER SET
			INC. 47
33	*	3	PAN HEAD SCREW M4X28
35	****	4	TAPPING SCREW BT M5X28
36	911133-5	2	PAN HEAD SCREW M4X18
37	687002-9	1	STRAIN RELIEF
38	682502-4	1	CORD GUARD 8-85
39	664064-4	1	POWER SUPPLY CORD AWG#18-2-2.5
40	****	1	MOTOR HOUSING COMPLETE
			INC. 20
41	911153-9	4	PAN HEAD SCREW M4X28
42	411485-9	1	HANDLE SET
			INC. 48
44	953106-2	2	RIVET 0-5
45	181021-2	1	CARBON BRUSH CB-51
46	643550-8	2	BRUSH HOLDER CAP 5-8
47	*	1	SWITCH HANDLE COVER SET
			INC. 32
48	411485-9	1	HANDLE SET
			INC. 42
49	*	1	DUST COVER
65	**	2	RETAINER

ACCESSORIES

Item No.	Part No.	Qty. Used	Description
2	***	1	DRILL CHUCK S13
400	***	1	CHUCK KEY S13
401	152492-0	1	GRIP 36 COMPLETE

* See Service Change 1
** See Service Change 2
*** See Service Change 3
**** See Service Change 4